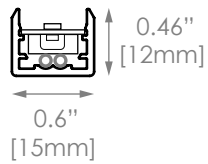
0.46"
[12mm]
0.6"
[15mm]

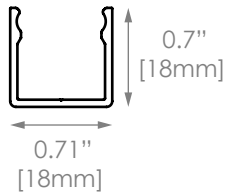
0.7"
[18mm]
0.71"
[18mm]

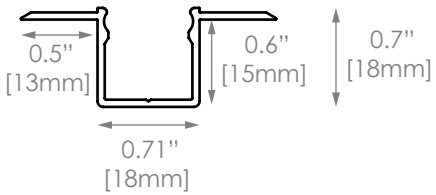
0.5"
[13mm]
0.6"
[15mm]
0.7"
[18mm]
0.71"
[18mm]

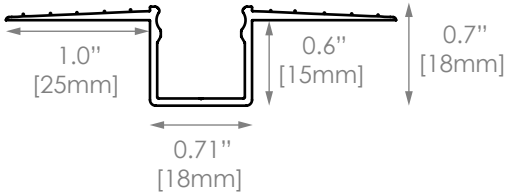
1.0"
[25mm]
0.6"
[15mm]
0.7"
[18mm]
0.71"
[18mm]

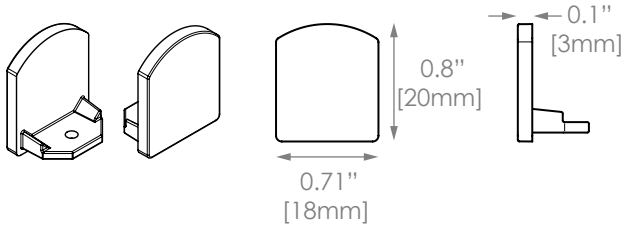
0.8"
[20mm]
0.71"
[18mm]
0.1"
[3mm]

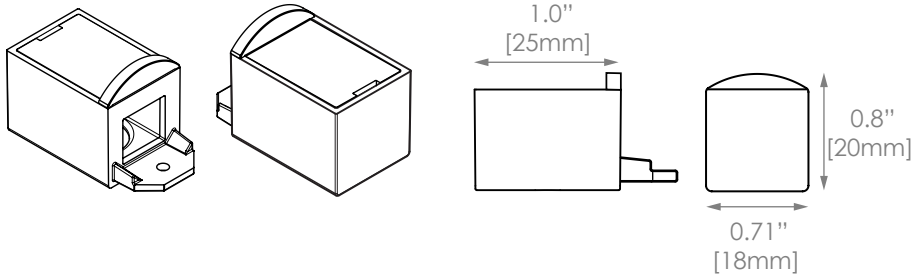
1.0"
[25mm]
0.8"
[20mm]
0.71"
[18mm]

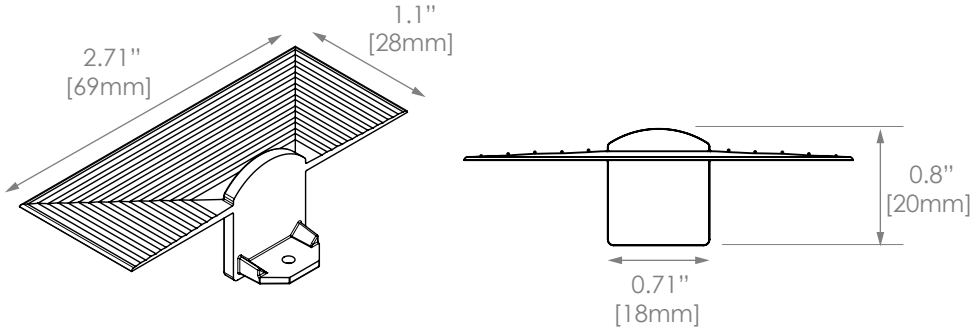
2.71"
[69mm]
1.1"
[28mm]
0.8"
[20mm]
0.71"
[18mm]

0.71"
[18mm]

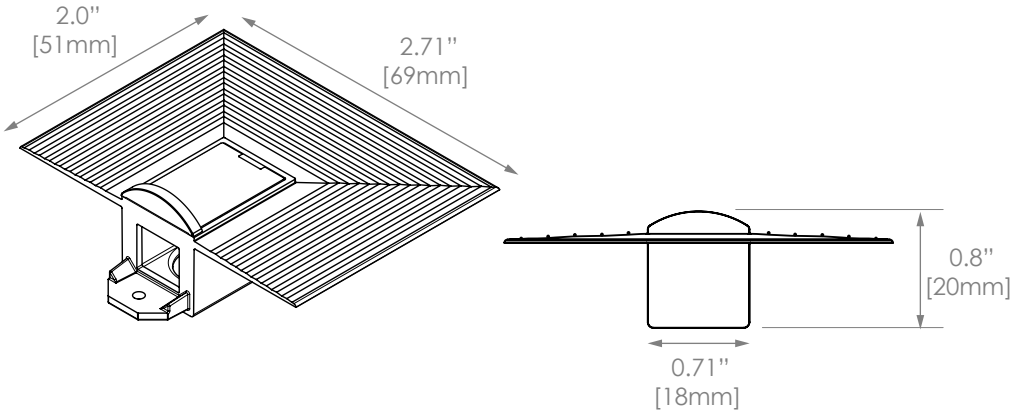
2.0"
[51mm]
2.71"
[69mm]
0.8"
[20mm]
0.71"
[18mm]