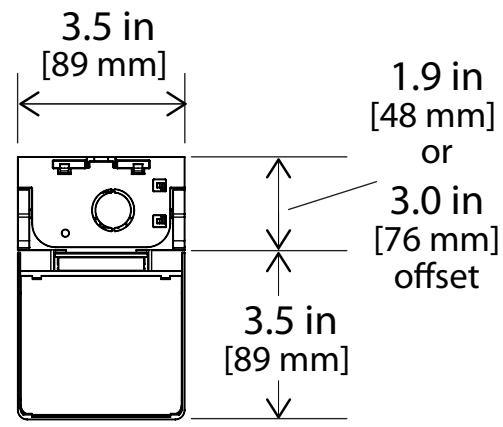
3.5 in
[89 mm]
1.9 in
[48 mm]
or
3.0 in
[76 mm]
offset
3.5 in
[89 mm]

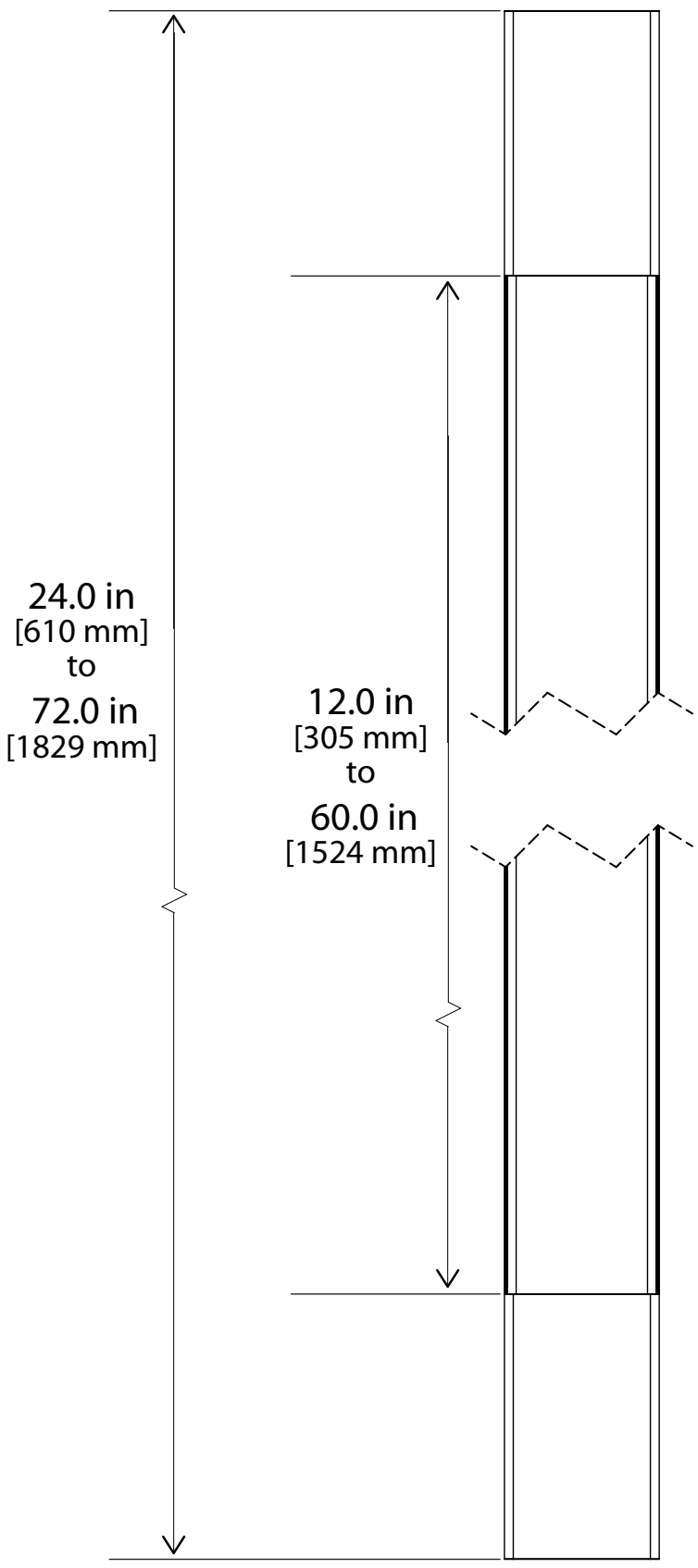
24.0 in
[610 mm]
to
72.0 in
[1829 mm]
12.0 in
[305 mm]
to
60.0 in
[1524 mm]

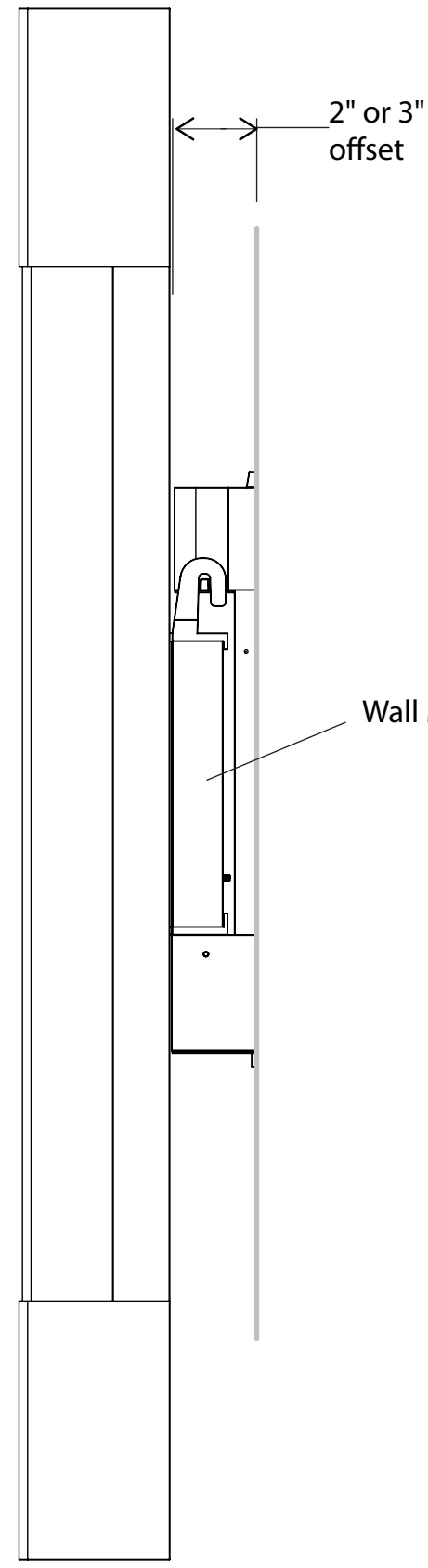
2" or 3"
offset
Wall Mounting Bracket

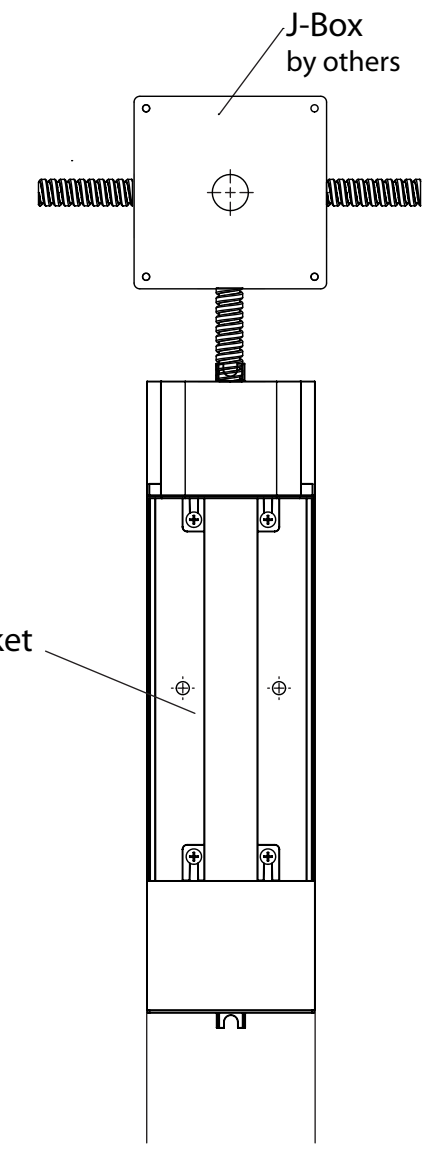
J-Box
by others