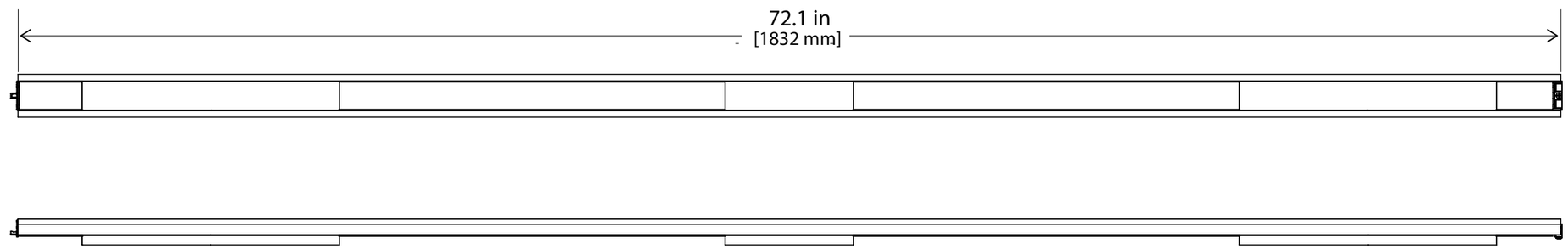
72.1 in
[1832 mm]

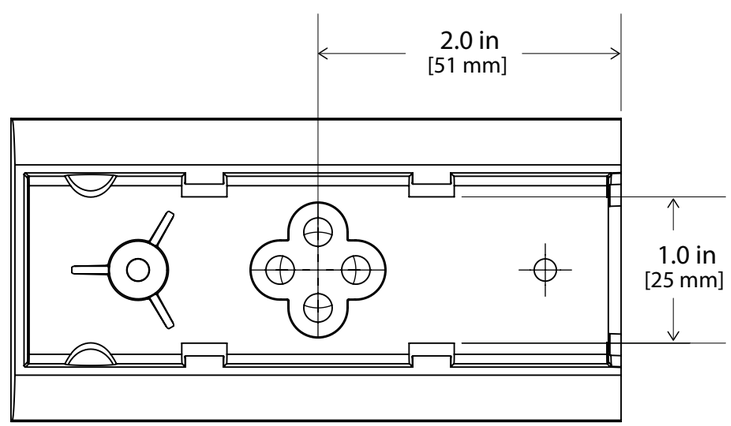
2.0 in
[51 mm]
1.0 in
[25 mm]

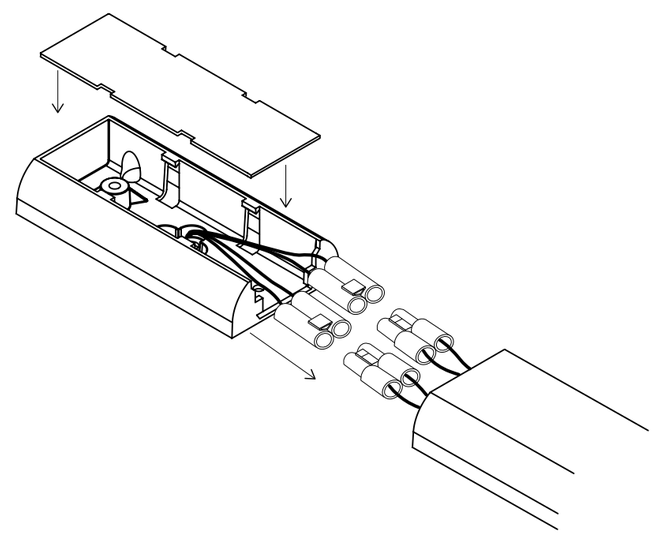

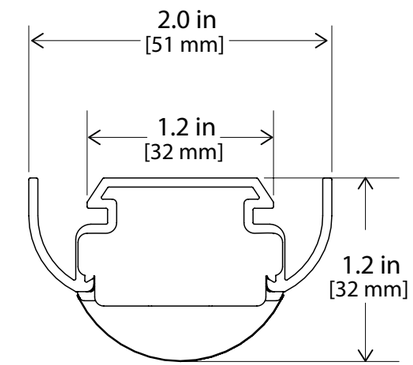
2.0 in
[51 mm]
1.2 in
[32 mm]
1.2 in
[32 mm]

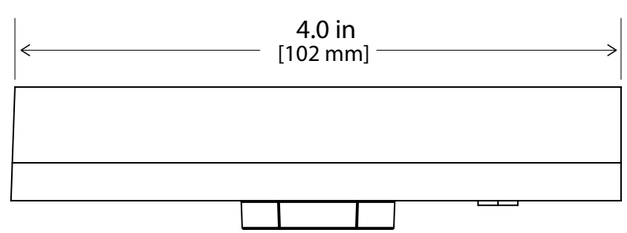
4.0 in
[102 mm]

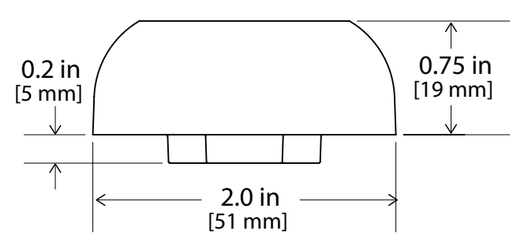
0.2 in
[5 mm]
0.75 in
[19 mm]
2.0 in
[51 mm]