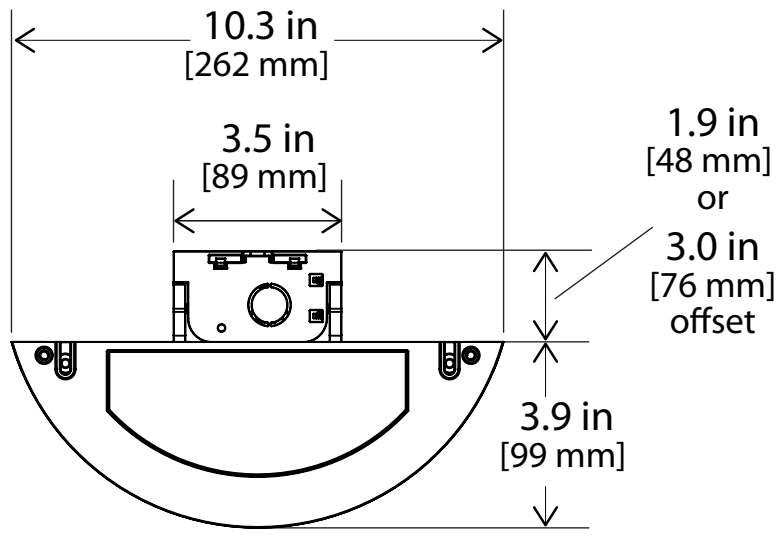
10.3 in
[262 mm]
3.5 in
[89 mm]
1.9 in
[48 mm]
or
3.0 in
[76 mm]
offset
3.9 in
[99 mm]

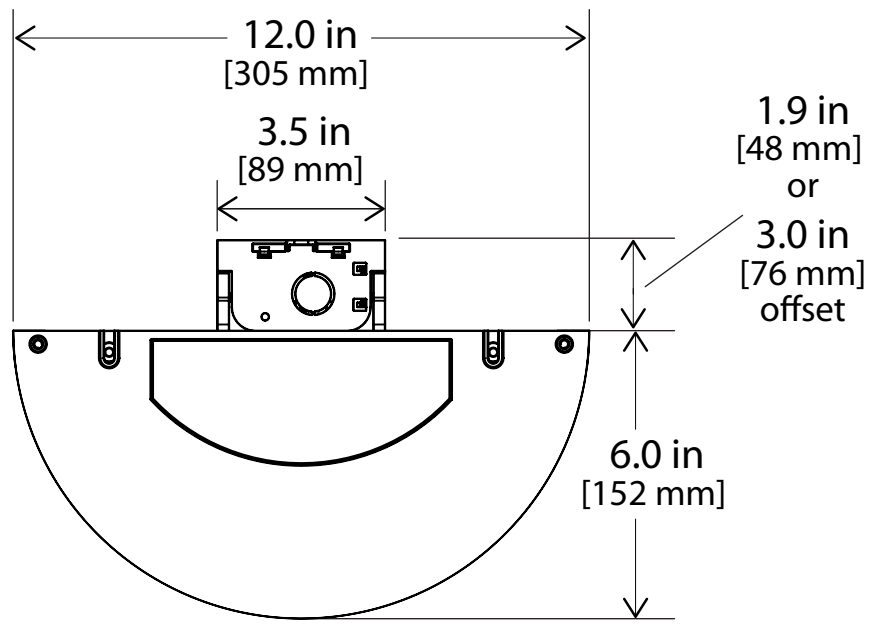
12.0 in
[305 mm]
3.5 in
[89 mm]
1.9 in
[48 mm]
or
3.0 in
[76 mm]
offset
6.0 in
[152 mm]

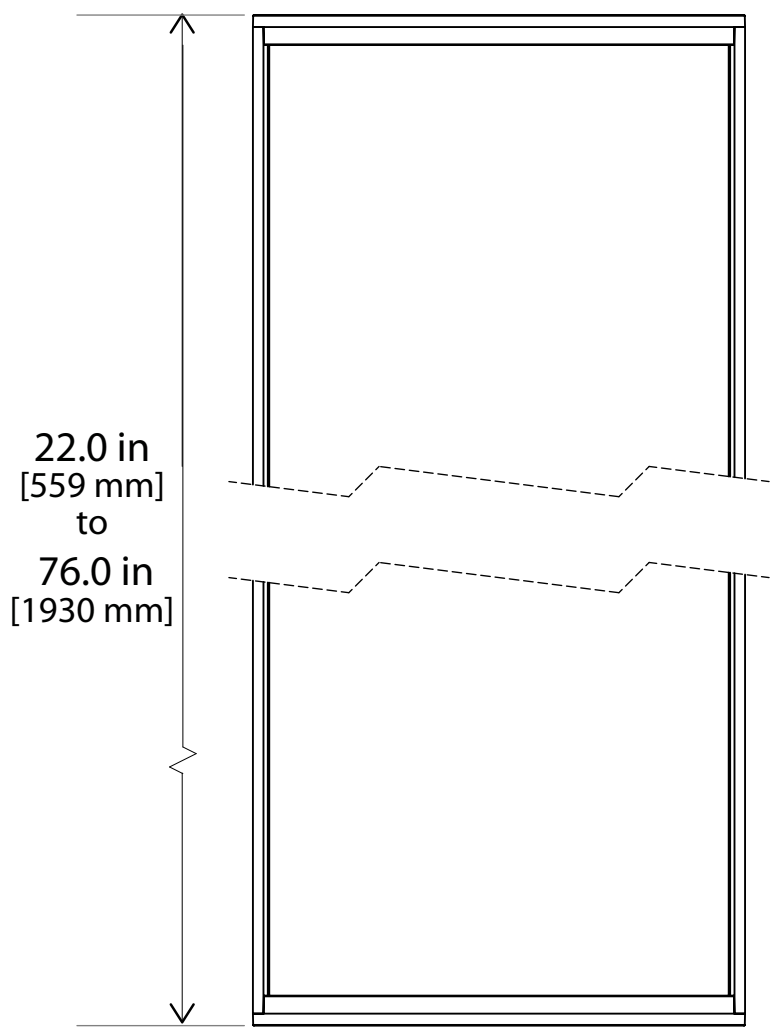
22.0 in
[559 mm]
to
76.0 in
[1930 mm]

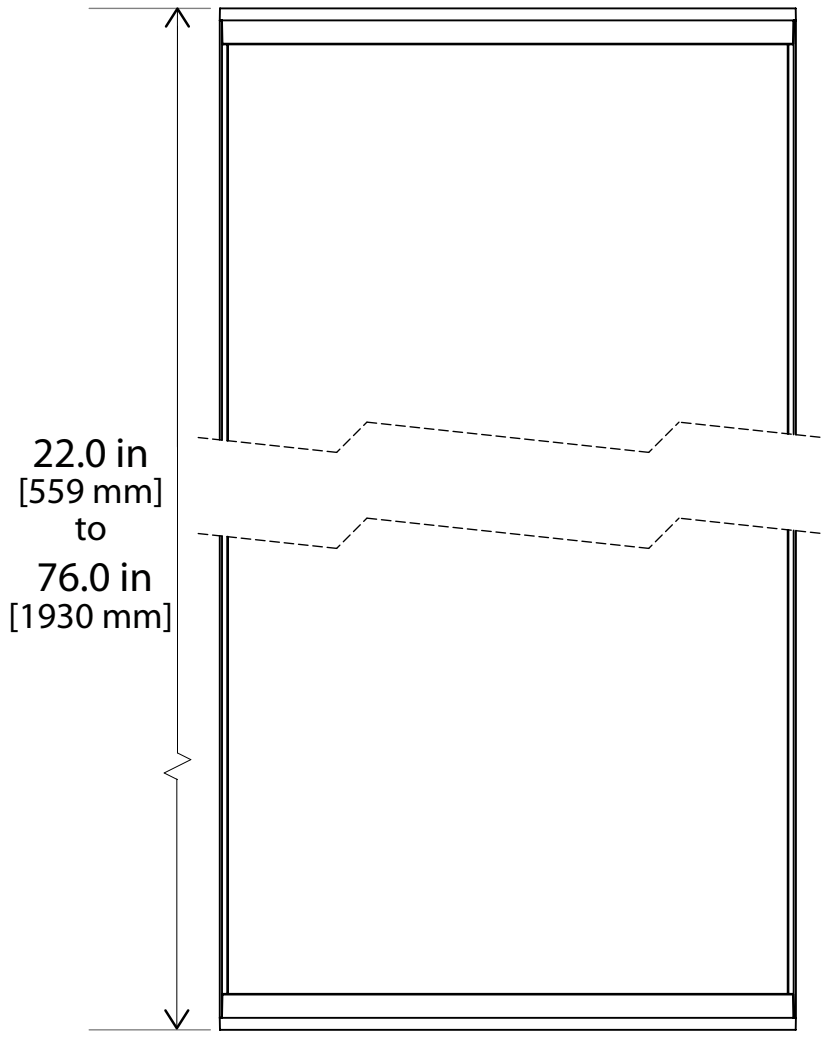
22.0 in
[559 mm]
to
76.0 in
[1930 mm]

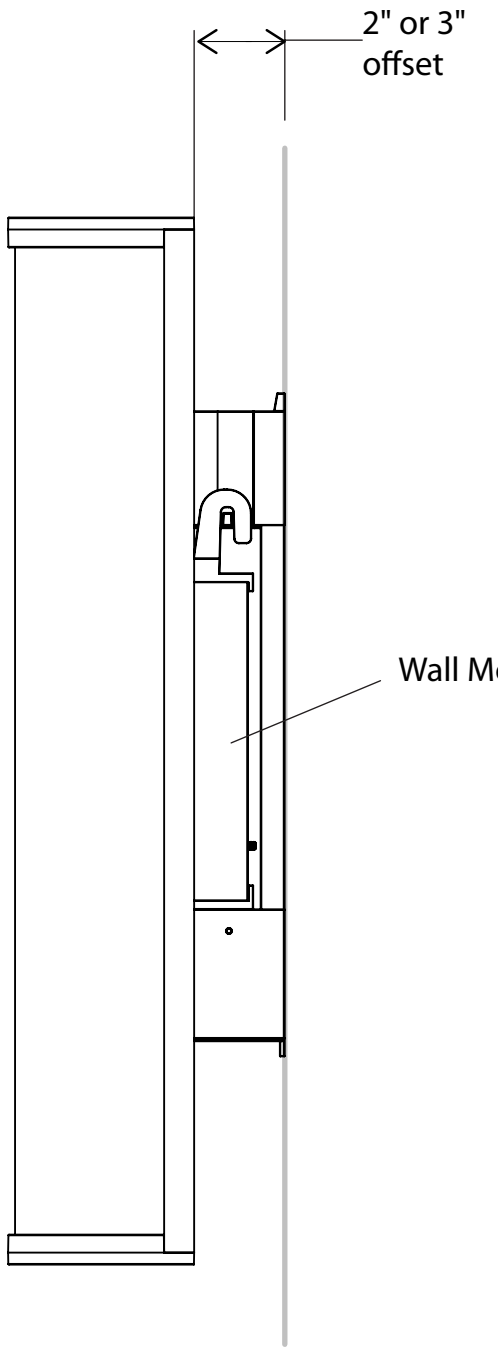
2" or 3"
offset
Wall Mounting Bracket

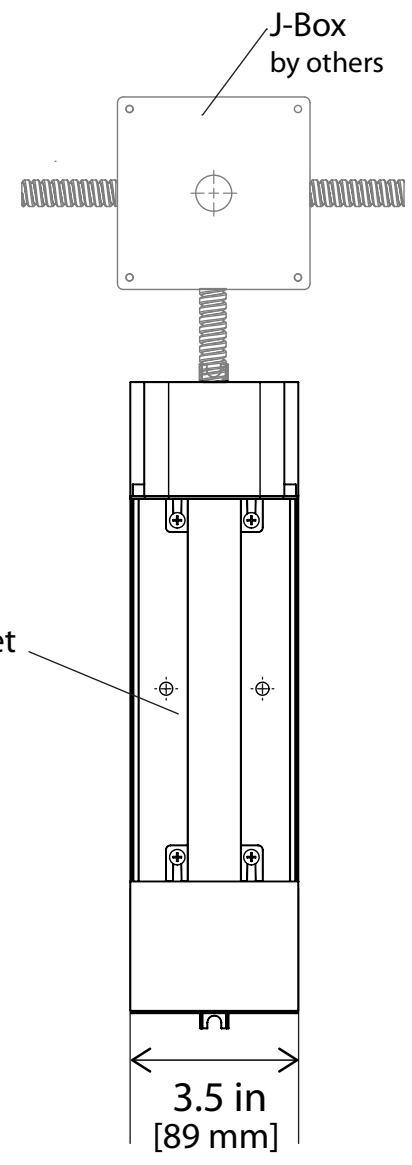
J-Box
by others
3.5 in
[89 mm]